# Maintenance And Rigging Manual

# Model 2T-1A

Section I - INDEX

CONGRATULATIONS

Welcome to the class of Great Lakes Owners. Your Great Lakes has been designed and constructed to give you the most in performance.

**AIRCRAFT REQUIREMENTS:**

Fuel Capacity: Total..... 27.4 Gal.
Oil Capacity: Total..... 8 Quarts
Engine – Lycoming..... IO-360-BIF6 or AEIO-360-BIF6

**Propellers – Hartzell:**

Constant Speed ..... HC-C2YK-4F/FC 7666A-2
Pitch Settings (30" Station)
Low .....12.5
High.....26.8

Page

**FUEL SYSTEM:**

Fuel is supplied to the engine by the engine drive pump. Fuel flows from the main tank in the center section through a header tank in the fuselage, through the fuel shut-off valve, the strainer, the fuel boost pump, (which is used for starting and emergency operation) to the engine driven pump. Four lines connect the main tank to the header tank, the RH forward line vents air from the header tank to the main tank.

The fuel shut-off valve has a control in each cockpit. It is also important that the holes in the vent on top of the main tank be kept open. A hole is also provided on the aft side of the vent in case the forward hole should become obstructed during flight.

The fuel gauge is a simple, trouble free, float indicating type with reading taken on the bottom of the indicator.

Drain valves are provided at the fuel gauge. At the aft left hand corner of the fuel tank, and on RH side of the front cockpit approximately 8 inches aft of the firewall for the header tank. The fuel strainer is provided with a drain operated by a pull control near the oil filler. Use 100/300 Octane fuel.

**Section I** **SYSTEM DETAILS**

## FUEL SYSTEM ASSEMBLY

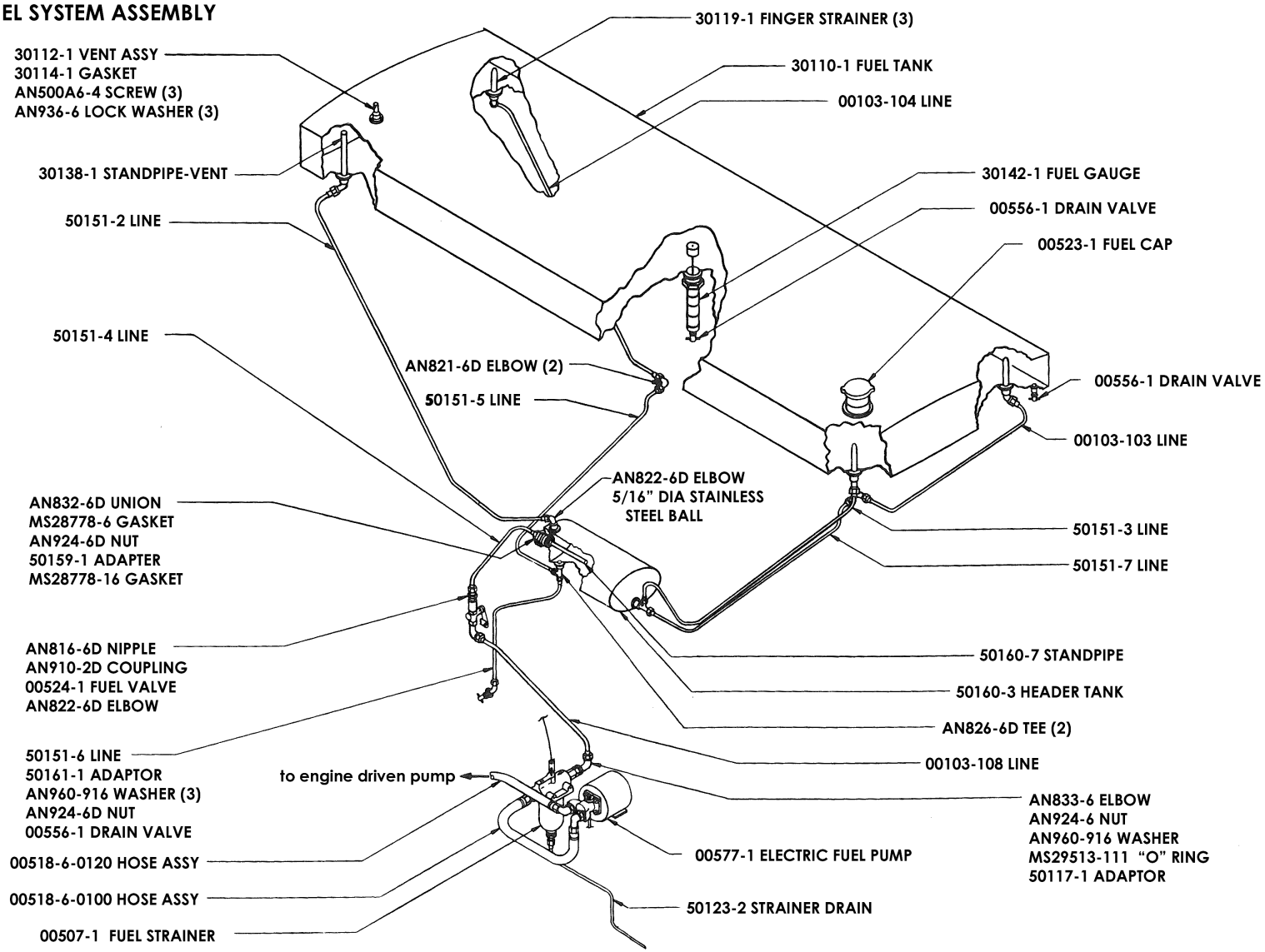

**Section I** **SYSTEM DETAILS**

## FUEL GAUGE ASSEMBLY

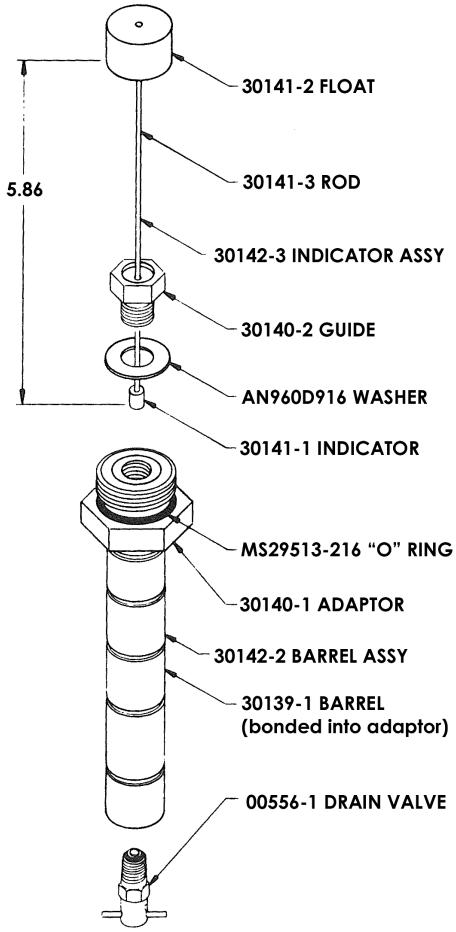

**OIL SYSTEM:**

During normal flight oil flows from the left fitting in the bottom of the engine through the firewall mounted oil valve, the center hose from the oil valve, the sump screen (on the right rear bottom corner of the engine), the engine driven pump and to the engine lubricating points.

During inverted flight oil flows from the breather port at the top rear center of the engine, to the "T" fitting (in the line to the oil separator), to the oil valve, the center hose from the oil valve, the sump screen, the engine driven pump and to the engine lubricating points. The right forward hose becomes the breather line during inverted flight.

The oil separator allows oil breather exhausted oil to separate and return to the oil system while still providing for a pressure release for the engine. The oil breather overboard line, connecting to the oil separator, runs through the firewall on the right top side, through the fuselage to just forward of the tail wheel, where it exhausts overboard.

The Great Lakes is the only aircraft made with a factory certified oil breather exhaust extending to the tail, saving much clean up time. The inverted oil system used is approved by Lycoming for indefinite inverted flight, however extreme slipping, skidding and half way maneuvers, such as knife edge flight, vertical climbs and any other zero "G" maneuvers of other than momentary duration, should be avoided, as these maneuvers will cause the oil valve balls to move off their seat allowing the pump to draw air which will cause an immediate loss of oil pressure.

**Engine Oil Chart**

Engine Oil, Aviation Grade: Ref. Lycoming Service Instructions 1014E

| | | | Operating Temperature | |
|---|---|---|---|---|
| | **Single Viscosity** | **Multi-Viscosity** | **Desired** | **Maximum** |
| Above 60° F | SAE 50 | SAE 40 or 50 | 180°F | 245°F |
| 30° to 90° F | SAE 40 | SAE 40 | 180 | 245 |
| 0 to 70° F | SAE 30 | SAE 40 or 20W-30 | 170 | 225 |
| Below 10° F | SAE 20 | SAE 20W-30 | 160 | 210 |

**Landing Gear System:**

The Great Lakes has a conventional Gear system and a gear shock system of a combination fluid oleo and internal spring shock strut. The main gear tires are 600 X 6 with an inflation pressure of 29 PSI. the tail gear tire is a 2.8/2.5 4 with an inflation pressure of 25 PSI. the shock strut fluid, in flight, is in the lower strut chamber containing the spring. When a load is applied to the spring, fluid is forced through restrictions into the upper chamber dampening the spring action. When the load is removed, the fluid drains again into the lower chamber.

**Section I** **SYSTEM DETAILS**

## LANDING GEAR ASSEMBLY

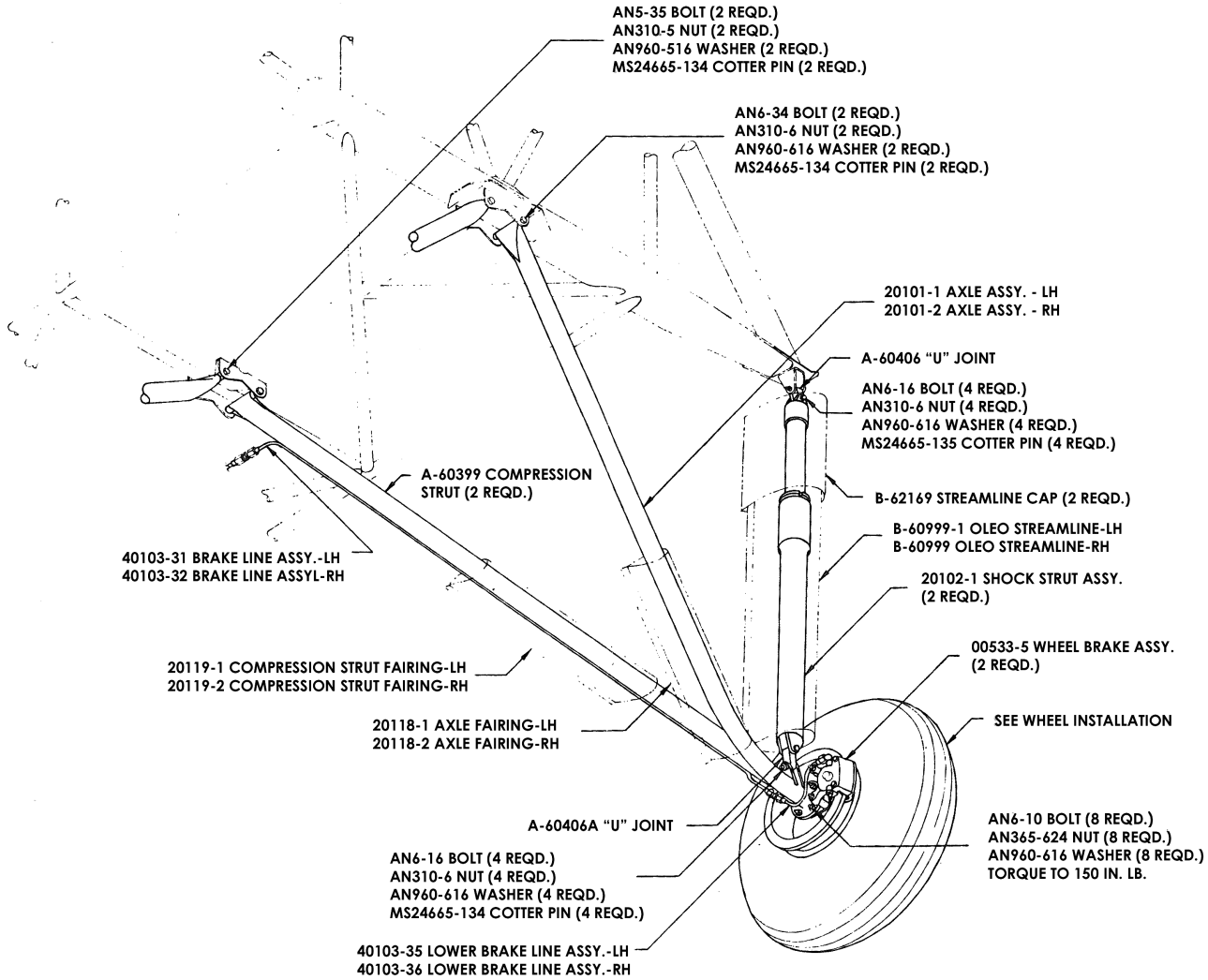

**SHOCK STRUT SERVICE INSTRUCTIONS:**

Very little servicing is required with this type of strut. If a leak should develop, strut must be removed for repair. To remove strut the spring loading must first be removed by jacking aircraft near top attach point of strut. With spring loading removed, remove bolts at both ends of shock strut. Top cap then will slip off and lower fairing may be removed by loosening clamps. No compression load exists on spring with strut removed from airplane. To disassemble strut, remove packing nut at top of lower cylinder. Slide nut up piston and using small hook remove packing. Clean packing area and threads as needed. Generally packing can be turned over and reinstalled to stop leak, or a new packing acquired from WACO Classic Aircraft (Part number 20102-12, Packing Rings.) After repacking, install and tighten pack nut. Service strut with 16 oz. Of MIL0H-5606 hydraulic fluid (red.)

**Section I** **SYSTEM DETAIL**

## SHOCK STRUT ASSEMBLY

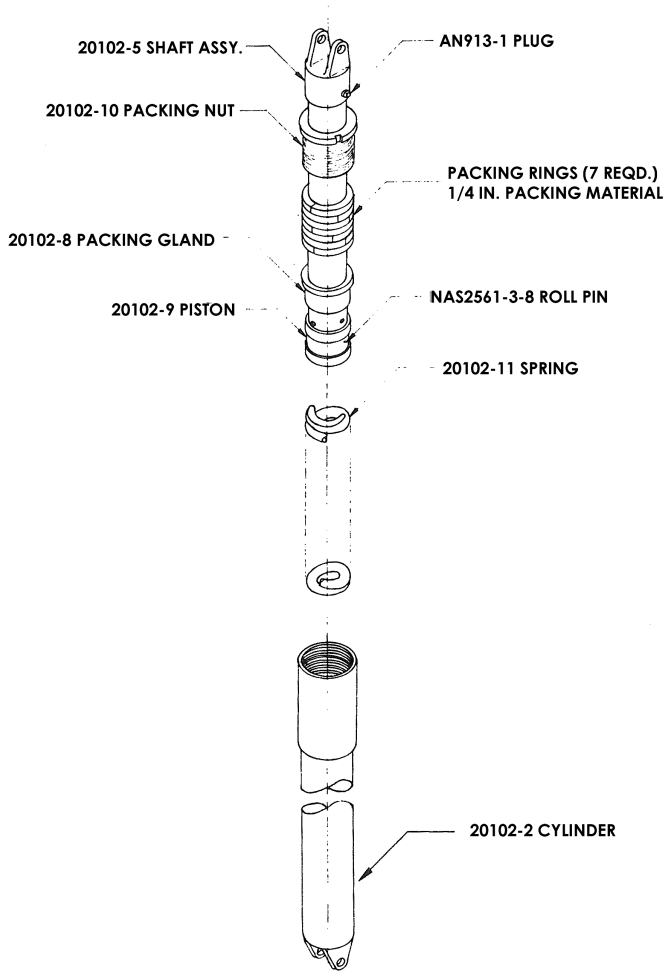

**HYDRAULIC BRAKES:**

The heel operated brakes provided in each cockpit are connected by direct linkage to two master cylinders located below the floor. A hydraulic fluid reservoir is located forward of the rear stick above the floor for accessibility.

To insure perfect operation, keep the system free from bubbles. The reservoir should be completely filled. See that the lines from the master cylinders to the wheels are free from air by bleeding (see bleeding instructions), after system has been filled from a dry reservoir, or at any time system has been opened for servicing, or there is a spongy response to the brake pedals.

**BLEEDING INSTRUCTIONS:**

Remove cap from reservoir, place pan under it to catch overflow. Attach line at bleed port at brake and slowly pump hydraulic fluid (MIL-H-5606, red) through system until no bubbles are visible. A pump type oil can may be used for this purpose. A longer line also can be attached to a fluid supply held above the level of the reservoir and the system gravity fed.

Section I **SYSTEMS DETAIL**

## HYDRAULIC BRAKES ASSEMBLY

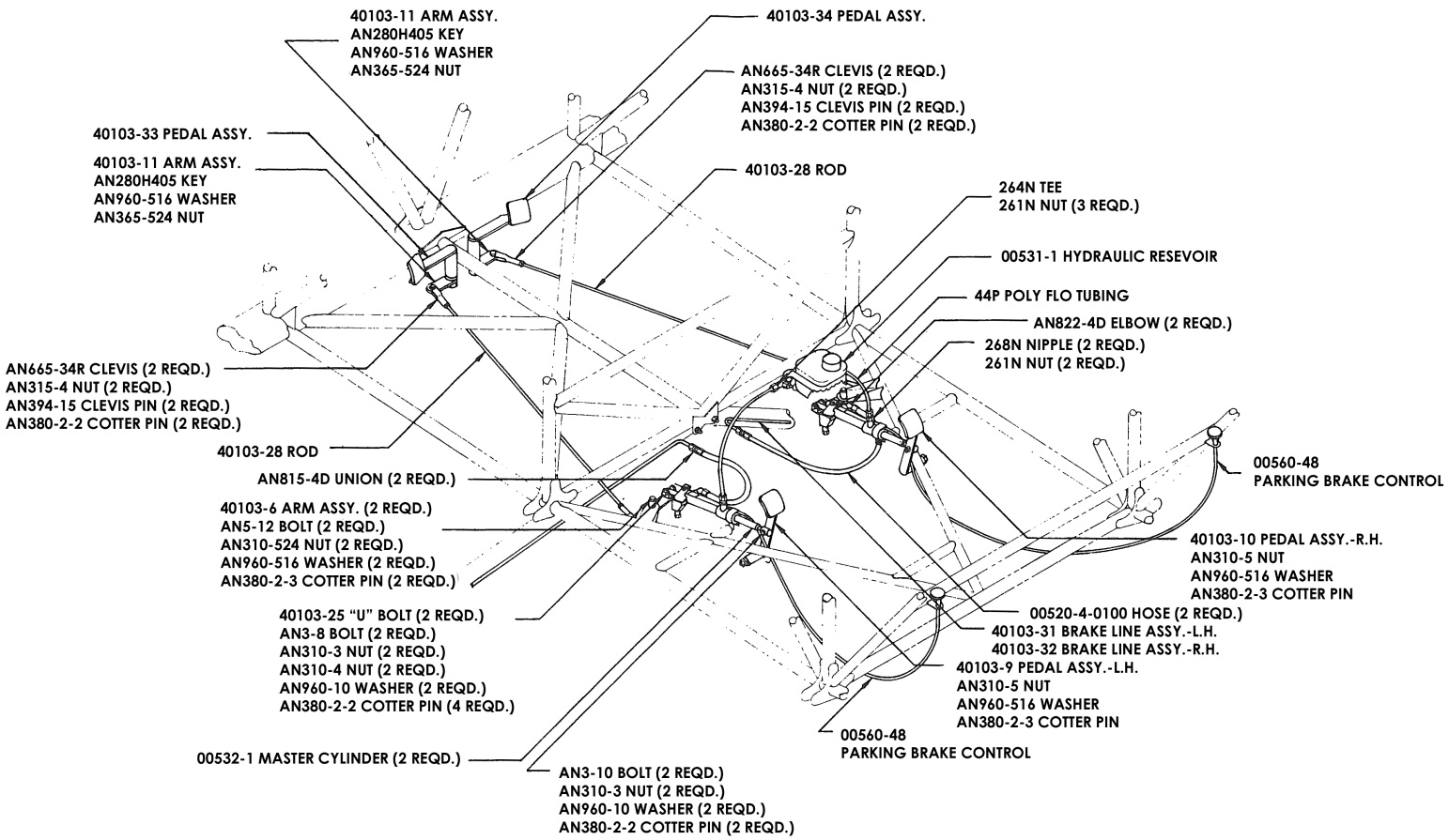

**BRAKE ADJUSTMENT:**

Brake pads should be replaced when worn to near rivets.

**MAIN WHEEL BEARING SERVICING:**

Remove cotter key and nut at axle. Remove spacer and wheel. If washers are removed at the inboard side of the wheel, note installation sequence as washer with largest inside diameter must be installed inboard for proper installation of wheel. Remove snap rings retaining both bearings in wheel. Thoroughly clean both bearings in suitable solvent and dry bearings. Inspect bearings for damage and regrease with MIL-G-25760 aircraft wheel bearing grease or equivalent.

Inspect grease seal for damage and replace if needed. Install bearings in wheel and install wheel on axle. Torque axle nut to tight, back off to first cotter pin hole, install cotter pin.

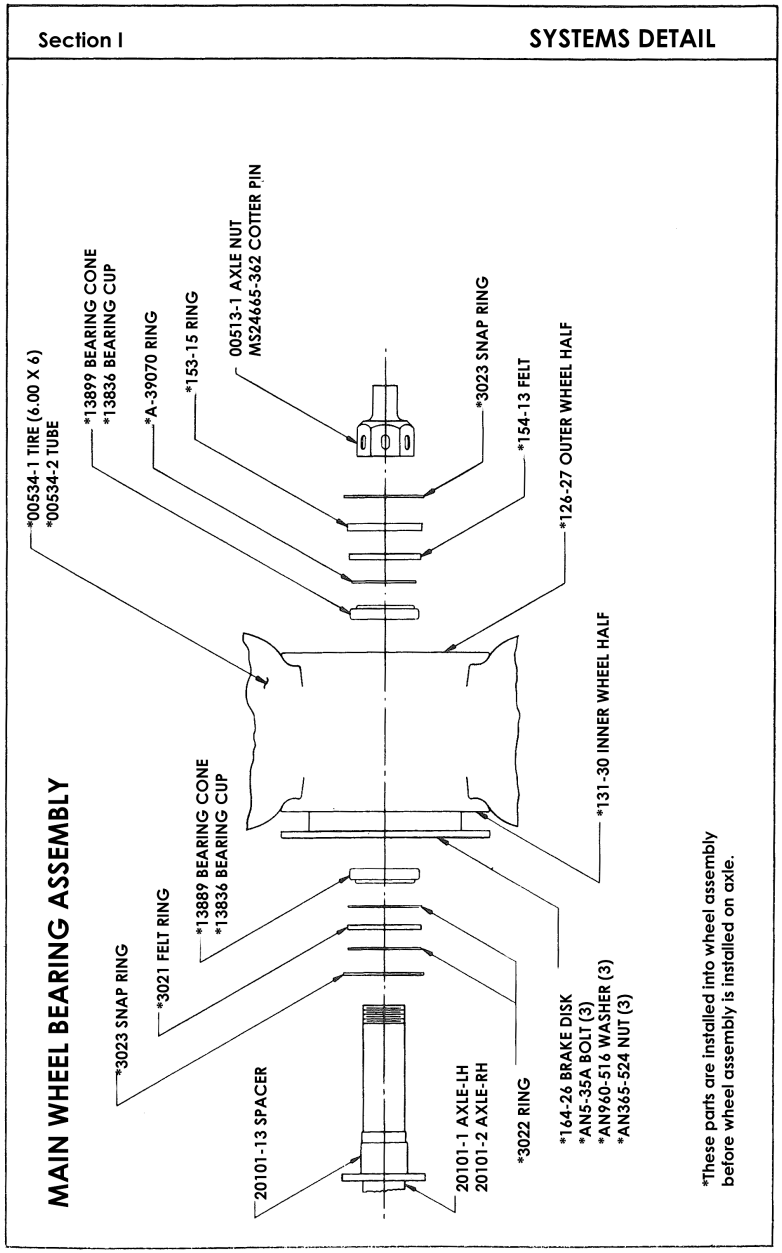
Section I
SYSTEMS DETAIL
MAIN WHEEL BEARING ASSEMBLY
*00534-1 TIRE (6.00 X 6)
*00534-2 TUBE
*13899 BEARING CONE
*13836 BEARING CUP
*A-39070 RING
*153-15 RING
00513-1 AXLE NUT
MS24665-362 COTTER PIN
*3023 SNAP RING
*154-13 FELT
*126-27 OUTER WHEEL HALF
*131-30 INNER WHEEL HALF
*3023 SNAP RING
*3021 FELT RING
*13889 BEARING CONE
*13836 BEARING CUP
20101-13 SPACER
20101-1 AXLE-LH
20101-2 AXLE-RH
*3022 RING
*164-26 BRAKE DISK
*AN5-35A BOLT (3)
*AN960-516 WASHER (3)
*AN365-524 NUT (3)
*These parts are installed into wheel assembly before wheel assembly is installed on axle.

Page

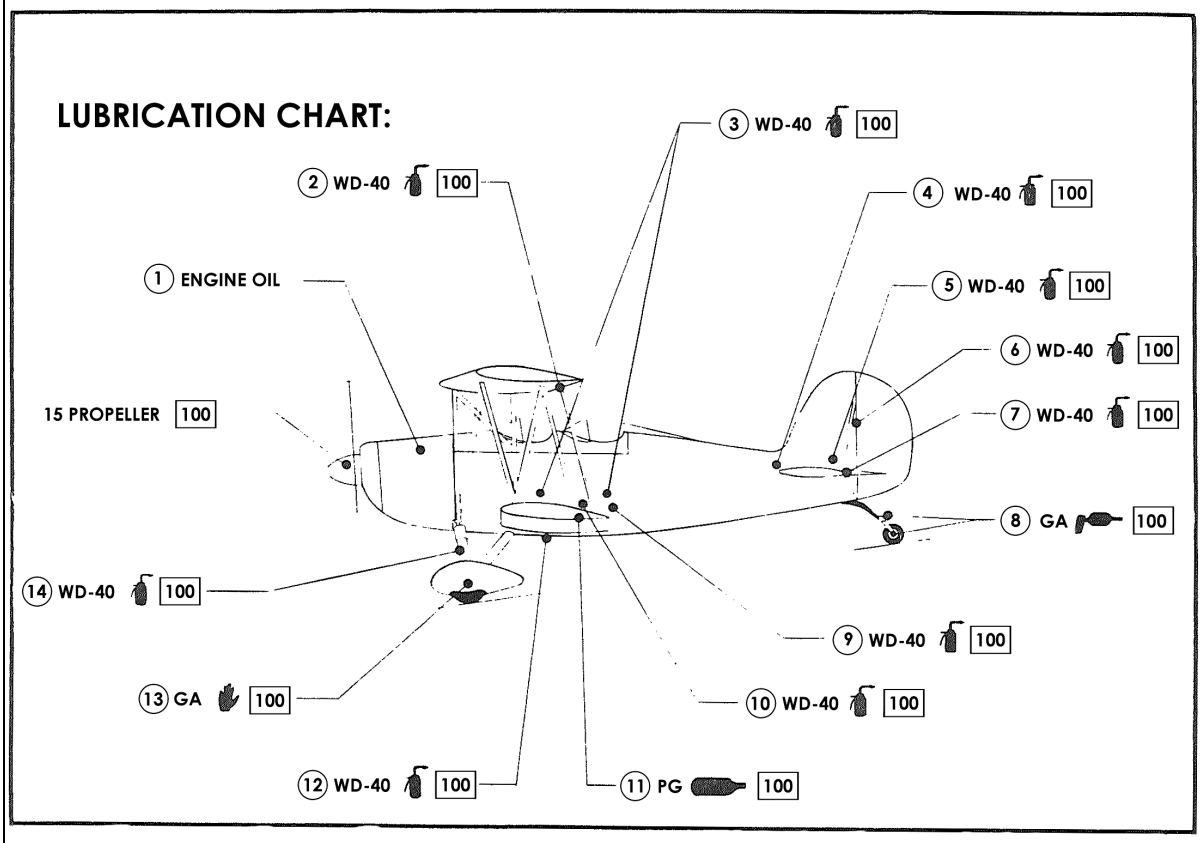


1. ENGINE OIL SYSTEM
   Ref. Engine Oil Chart Section I
   Ref. Engine Oil System Section II

2. AILERONS SLAVE TUBES
   2 Hinge Points, Both Sides

3. RUDDER PEDALS – 8 Hinge Points
   RUDDER PEDALS CONNECTING LINK TUBES
   4 Hinge Points
   RUDDER PEDALS CABLE CONNECT
   2 Hinge Points
   CONTROL COLUMN – 2 Hinge Points
   CONTROL COLUMN CONNECTING LINK TUBE
   2 Hinge Points
   CONTROL COLUMN BEARING TUBE
   2 Lube Cups
   CONTROL COLUMN ELEVATOR CABLE CONNECT
   2 Hinge Points

4. STABILIZER TRIM ACTUATORS SCREW SHAF
   2 Places
   STABILIZER ACTUATOR – 2 Pivot Points
   STABILIZER FRONT SPAR BEAM CONNECT
   2 Hinge Points

5. ELEVATOR HORN ASSEMBLY
   4 Hinge Points
   ELEVATOR HORN ASSEMBLY CABLE CONNECT
   2 Hinge Points

6. RUDDER – 3 Hinge Points

7. ELEVATOR – 2 Hinge Points, Both Sides

8. TAIL WHEEL ASSEMBLY – 2 Zerks

9. PARKING BRAKE CONTROL CABLES
   2 Places

10. AILERON CONTROL TUBE CONNECT
    4 Ball and Socket Joints
    AILERON CONTROL TUBE SUPPORT
    2 Lube Cups

11. AILERONS HINGE BEARINGS
    3 Lower/2 Upper, Both Sides

12. BRAKE PEDALS – 4 Hinge Points
    BRAKE PEDALS LINKAGE RODS
    4 Hinge Points

13. LANDING GEAR WHEEL BEARINGS
    2 Places

14. LANDING GEAR STRUTS AND SHOCK
    12 Hinge Points

15. PROPELLER SERVICING
    Ref. SECTION II FOR SERVICE AND PROPER LUBRICATION

**EACH 50 HOURS:**

Battery servicing involves adding distilled water to maintain the electrolyte even with the horizontal baffle plate at the bottom of filler holes, checking the battery cable connections, and neutralizing and cleaning off any spilled electrolyte or corrosion. Use bicarbonate of soda (baking soda) and water to neutralize electrolyte or corrosion. Follow with a thorough flushing with water. Brighten cables and terminals with a wire brush, then coat with petroleum jelly before connecting. The battery box also should be checked and cleaned if any corrosion is noticed. Distilled water, not acid or "rejuvenators", should be used to maintain electrolyte level. Check the battery every 50 hours (or at least every 30 days), oftener in hot weather.

Check tires for proper inflation.

**ENGINE OIL SYSTEM:**

Engine oil should be checked with the oil dipstick 5 to 10 minutes after stopping the engine to allow the oil to flow back into the sump. Engine oil should be drained while the oil is still hot.

On aircraft equipped with an external oil filter, change engine oil and filter element at 50-hour intervals. On aircraft NOT equipped with an external oil filter, change engine oil and clean the oil screen EVERY 25 HOURS. Change oil every four months even though less than the specified hours have accumulated. Reduce these periods for prolonged operation in dusty areas, in cold climates where sludging conditions exist, or where short flights and long idle periods are encountered, which cause sludging conditions. Always change oil, and replace filter elements or clean the oil screen, whenever oil on dipstick appears dirty.

**EACH 50 HOURS:**

Induction air filters keep dust and dirt from entering the induction system. Dust inducted into the intake system is probably the greatest single cause of early engine wear. The filters should be removed and cleaned every 50 hours maximum when operating under ideal conditions and more frequently if warranted by operating conditions. Under extremely dusty conditions, daily maintenance of filters is recommended. Some operators prefer to hold a spare filter at their home base of operation so that a clean filter is readily available for use.

**NOTE:** Keeping a supply of clean, serviced filters on hand will speed up air filter servicing.

To service the dry type filter, proceed as follows:

(a) Remove the filter from the airplane.
(b) Clean the filter by blowing with compressed air (not over 100 psi) from direction opposite of normal air flow. Arrows on filter case indicate direction of normal air flow.

**NOTE:** Use care to prevent damage to filter element when cleaning filter with compressed air.

(c) After cleaning as outlined in step “b” filter may be washed, if necessary, with a mild household detergent and warm water solution.

**NOTE:** The dry filter may be cleaned with air a maximum of 30 times or it may be washed a maximum of 20 times. It should be replaced after 500 hours of engine operation or one year, whichever occurs first.

**NOTE:** Replace filter if damaged.

**EACH 50 HOURS:**

**CAUTION:** Do not use solvent or cleaning fluids to clean filter. Use only a mild household detergent and warm water solution when washing the filter.

(d) After washing, rinse filter in clean water and allow water to drain from filter. Dry filter with compressed air (not over 100 psi).

(e) Be sure induction air box is clean, and alternate air inlet door functions properly.

(f) Install filter in air box with gasket on aft face of filter frame and with air flow arrow on filter pointed in the correct direction.

**EACH 100 HOURS:**

(1) Spark Plugs – Clean, test and regap.
(2) Fuel System Drains – Open valves and drain off any water and sediment. Drain valves are provided at the fuel gauge. At the aft left hand corner of the fuel tank, and on RH side of the front cockpit approximately 8 inches aft of firewall for the header tank. The fuel strainer is provided with a drain operated by a pull control near the oil filler. Use 100/130 Octane fuel.
(3) Brake Master Cylinder – Check fluid level and refill as required using MIL-H-5606 hydraulic fluid (red).
(4) Fuel Strainer – Disassemble and clean bowl and screen.
(5) Stabilizer Trim Actuator – Check freedom of movement and lube with WD 40 (Silicone). Check for proper tension on cord. Forward pulley may be relocated to another hole in bracket to increase tension.
(6) Wheel Bearing Lubrication – It is recommended that main wheel bearings be cleaned and repacked at the first 100-hour inspection and at each 500-hour inspection thereafter. If more than the usual number of take-off and landings are made, extensive taxiing is required, or the airplane is operated in dusty areas or seacoast conditions, it is recommended that cleaning and lubrication of wheel bearings be accomplished at each 100-hour inspection. MIL-G-25760 grease is recommended.
(7) Check tail surface movement for freedom and that no excessive play exists. Lube with WD 40 (Silicone). Use amount only as needed. Wipe off any excess.
(8) Check ailerons for freedom of movement, and security. Lube aileron hinges only with dry lube such as Powdered Graphite.
(9) Make visual inspection of coverings.
(10) Inspect landing gear attach fittings.

**EACH 100 HOURS: (Continued)**

(11) Check brake disks, tires and brake lines. Check tire inflation.
Main 29 PSI
Tailwheel 25 PSI
(12) Lubricate tailwheel zerks (3). (MIL-G-7711).
(13) Check tail brace wires and fittings.
(14) Check stabilizer attach bolts.
(15) Check control cable attach bolts for wear and cables for frayed strands.
(16) Check flying and landing wing and racking wires for proper adjustment. Also check all fittings.
(17) Check interplane struts and cabane struts and attach fittings.
(18) Check wing walk and refinish as needed.
(19) Lube control stick supports, rudder pedal supports and aileron control tube support with WD-40 (Silicone).
(20) Check fuel system for leaks.
(21) Inspect seat belts and shoulder harness for worn spots and/or cuts.
(22) Check all instruments and plumbing. Check pitot and static systems.
(23) Check windshields for cracks and security.
(24) Remove spinner and lubricate prop.

A. Propeller service instruction
A number of greases have been tested for water resistance, tackiness, lubricating properties when mixed with water, and viscosity under various temperatures. The following greases are recommended in the order of listing:

A. Hartzell DG Grease (Low Temperature Synthetic)

**EACH 100 HOURS: (Continued)**

B. Mil-G-23827
C. Stroma HT-1 (Z-801 Grease) Union Oil of California
D. Gulflex-A Gulf Oil Company
E. RPM Aviation Grease No. 2, Standard Oil Company of California
F. Mobil Grease Aero Lo-Hi PD-535K, Socony Vacuum Oil Company
G. Aero-General Purpose, Socony Mobile Company
H. Stroma LT-1 (Z-815 Grease), Union Oil Company of California
I. Texaco Regal Starfax Special
J. Calypsol H729. German Calypsol Co., Dusseldorf
K. Texaco Marfax No. 3

The Hartzell propeller owner's manual mentions greasing the propeller at 1000 to 1500 hour overhaul.

Field experience shows the propeller should be serviced at the 100 hr. inspection. One recommended procedure is to remove two of the four grease zerks diagonally across from each other and grease with approved grease until grease emits from the diagonal hole, wipe clean and reinstall zerk.

This procedure should prevent overservicing.

B. Bolts should be torqued to 60-70 ft. lbs. and safety wired with .041 safety wire in two groups of three. Check for security. Check condition of spinner and reinstall.

**EACH 100 HOURS: (Continued)**

(25) Clean airplane inside and out.

The above items are to be used as a guide. Generally the 100 hour inspection is a complete inspection of the complete airframe and power plant. All panels and access covers should be removed for a thorough inspection.

**NOTICE:**

All rigging instructions and measurements are based on the assumption that the airplane has been leveled (laterally and longitudinally) as determined by a level placed on the top longeron in rear cockpit left hand side. This lateral check can be made by placing a level under the rear instrument panel.

**CENTER SECTION RIGGING:**

(1) Attach LH C60635 and RH C60636 cabane struts to fuselage.
   A. Install AN4-16A bolts at forward attach points.
   B. Install AN4-16A bolts at AFT attach points.
   C. Use AN365-428 nuts and AN960-416 washers with above bolts. Nuts to be aft.
   D. Install (4) 30130-3 racking wires using attach hardware. Adjust length slightly over center section attach point dimension. Same number of threads should be showing at each end of wires. Clevis pins ¼" X 15/32".

(2) With one man on each side of 30116-5 center section, put it in place over cabane struts.
   A. Install (4) AN4-21A bolts with AN465-428 nuts. Nuts to be aft.
   B. Draw wires up snugly making sure they are the same length. Length can be determined by measurement or by use of trammel. Tension 800 ± 50 lbs.

**WING RIGGING:**

(1) Install lower wings to fuselage.
   A. Place one man at tip of 60533-1 LH lower wing and two men at wing root and locate wing on fuselage.
   B. Install AN6-22A bolt at forward attach point.
   C. Install AN6-21A bolt at aft attach point. AN365-624 nuts, AN 960-616 washers are used with above bolts.
   D. Install support temporarily under lower wing.
   E. Install 60534-1 RH lower wing same as above.

**WING RIGGING:**

(2) Attach upper wings.
   A. Attach 60705-8 LH interplane strut to 60559-2 LH upper wing with AN4-21A bolt (front) and AN4-16A bolt (Rear). (No nuts yet.)
   B. Interplane strut adjustment fitting (at lower aft attach points) should be adjusted to have one or two thread showing.
   C. Using preferably four men, guide the left upper wing into place. Two men should be at root and one at tip of upper wing.
   D. Install wing to center section with (2) AN5-20A bolts, AN960-516 washers and AN365-524 nuts.
   E. Install lower interplane strut bolts using AN4-21A bolt (front) AN4-16A bolt (rear), 4 AN960-416 washers and 4 AN365-428 nuts (top and bottom)
   F. Install (2) 30130-4 Landing wires. Remove temporary support. Right hand threads to be at lower end of wires.
   G. Install (2) 30130-12 forward and (2) 30130-11 (aft) flying wires using 8 AN394-8 pins and (8) AN381-2-3 cotter keys.
   H. Install right wing same as above.

(3) Complete rigging.
   A. The landing wires should be tightened until each lower wing has two degrees dihedral angle. This will be a length of approximately 83.75” pin centers. Interplane struts will provide zero degree dihedral to upper wings.

   B. Tighten flying wires. Tension 750 ± 50 lbs.
   C. Install A62411 (LH) and (RH) separators.

**WING RIGGING ASSEMBLY**

Interplane strut - front length (pin centers) ..... 48.83
-Center length (pin centers) ..... 47.60
-Rear length (pin centers) (adjustable) .....49.25 to 49.61
Cabane strut - front length (pin centers) ..... 30.45
-Center length (pin centers) ..... 39.40
-Rear length (pin centers) ..... 29.72
Flying wires - front length (pin centers) ..... 97.00
¼" – Rear length (pin centers) ..... 103.75
Landing wires – length (pin centers) ..... 83.75
(3/16" thru serial 0510; ¼" serial 0511 and on)

Racking wires - length (pin centers) .....50.31
(1/4")
Stabilizer Brace Wires - length (pin centers) .....37.12
(10-32)
Fin Brace Wires - length (pin centers) .....45.06
(6-40)
Correct rigging will result in:
0° dihedral in upper wing
2° dihedral in lower wing
3° incidence in upper wing
3° incidence in lower wing
25" stagger (at center section)

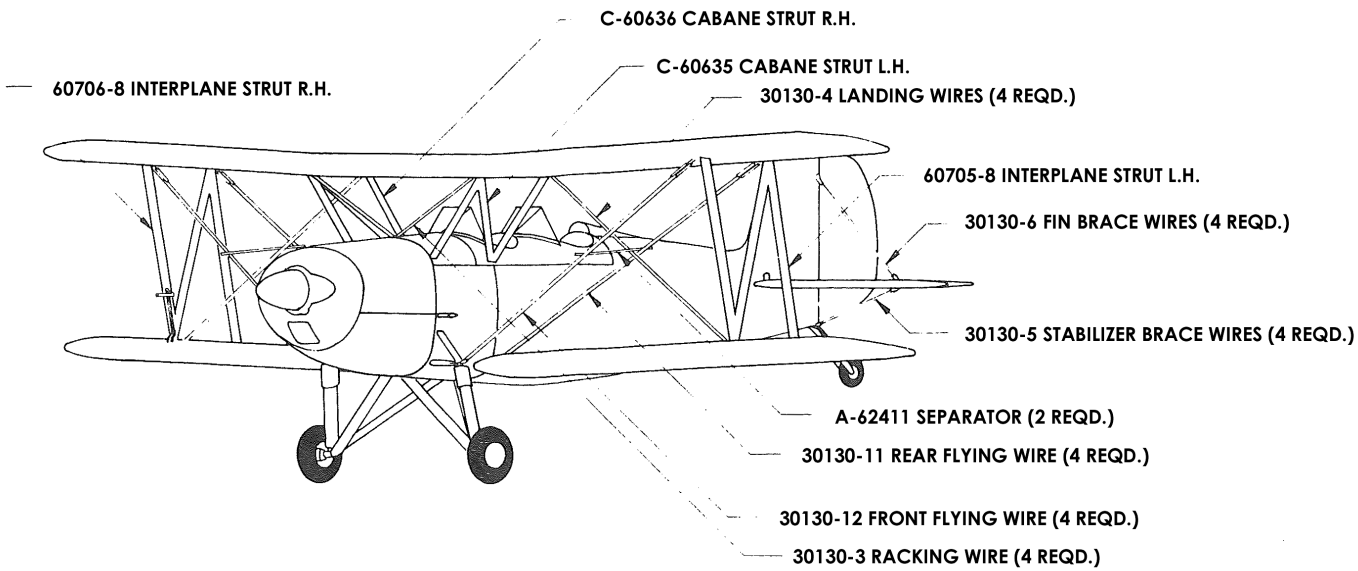

**WING RIGGING:**

(4) Aileron Installation: Make sure wings are rigged.

NOTE: The Aileron control tube is individually fitted at the aileron end on first installation, once fitted the control tube must remain on the same side of the same airplane. Do not interchange control tubes side to side nor airplane to airplane.

A. Attach 30145-1 LH upper aileron to LH upper wing with (2) 30107-2 bushing, (2) 30107-3 straps, (2) AN3-16A bolts, (2) AN960-10 washers and (2) AN365-1032 nuts. Install 30154-1 spacers as required to position aileron.
B. Attach 30145-2 RH upper aileron to RH upper wing in same manner.
C. (60643 collar must be on 62351 crank) slide 61172 aileron control tube through LH wing into 62351 crank (in fuselage) and through crank far enough to allow lower aileron to be attached.
D. Attach 60351-1 LF lower aileron with (3) 30107-2 bushings, (3) 30107-3 straps, (3) AN3-16A bolts, (3) AN960-10 washers and (3) AN365-1032 nuts.
E. Slide control tube outward into aileron. Install AN3-16A bolt through 60643 collar, 62351 crank and 61172 control tube with AN960-10 washer and AN365-1032 nut. Install (2) AN4-16A bolts through 62351 crank and 61172 control tube with (2) AN365-428 nuts and AN960-416 washers as required. Do not sue AN4-15A bolt. (Deforming of control tube by over torqueing is reason for not using AN4-15A bolts.)
   NOTE: Aileron travel has been set at the factory to proper travel and should not require adjustment unless the control stick support has been changed.
F. Install 61172 control tube and 60352-1 RH lower aileron as in C, D and E.

**WING RIGGING:**

G. (Assuming reinstallation of same control tube) Install (2) AN4-34 bolt with (2) AN960-10L washers, (2) AN365-1032 nuts in each aileron.
H. (Assuming installation of a new control tube) Center rear control stick laterally and secure in this position. Position lower ailerons in wing (laterally) to have equal clearance at each end. Place ailerons even with trailing edge of wing. Drill ¼" hole into control tube through aileron attach holes 2 places top and 2 places bottom on each aileron. Install (2) attach bolts in each aileron as in item G.
Note: The link from the stick to the crank is **not** used to position the ailerons nor to adjust aileron travel.
I. Adjust 30152-1 slave tube on each side to position upper aileron even with trailing edge of wing. Slave tube is attached to 30144-1 bracket at each end with AN4-7A bolt at top and AN4-10A bolt at bottom, AN960-416 washer and AN365-428 nut (the ball type and fitting goes at the top of the slave strut). The 30144-1 bracket is attached to each aileron with (2) AN3-4A bolt and (2) AN960-10 washer.

(5) If properly rigged, the airplane should fly in a normal course with hands off for an indefinite period in smooth air.

A) Right wing heaviness can be corrected by lengthening slightly the rear interplane strut on the right wing.
B) Left wing heaviness can be corrected by lengthening slightly the rear interplane strut on the left wing.

NOTE: Airplane must be flying straight directionally at normal cruise speed before wing heaviness corrections are made.

## CONTROL SURFACES TRAVEL:

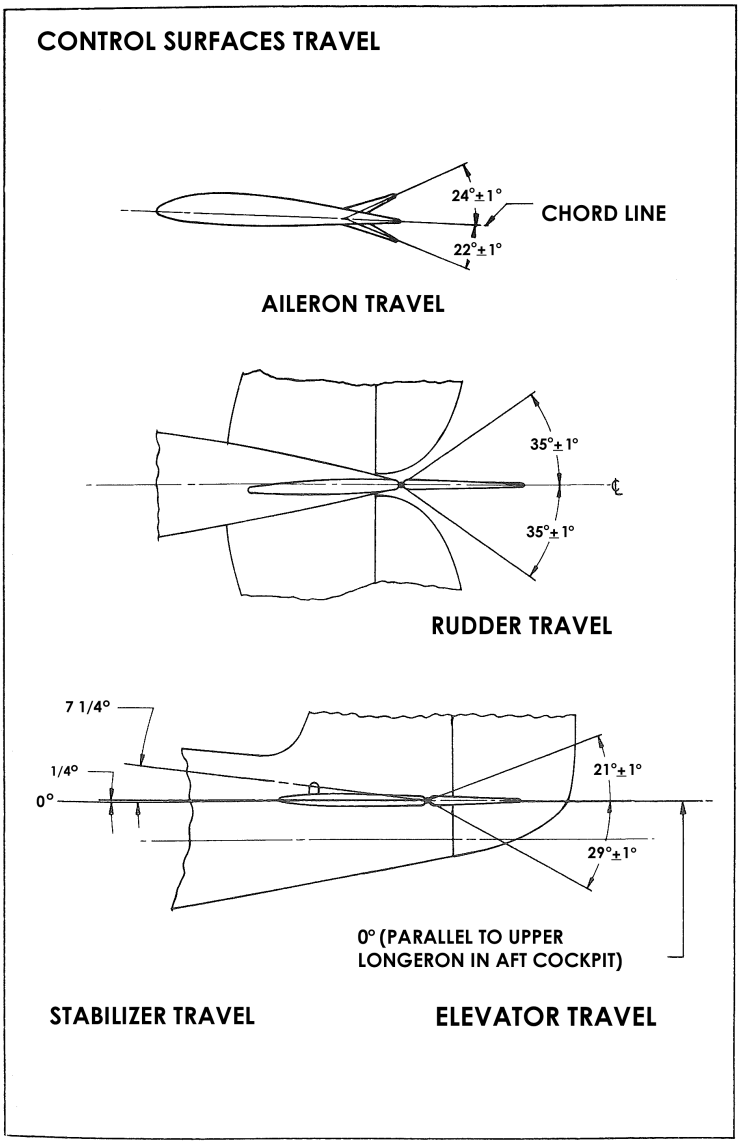

## UPPER AILERONS INSTALLATION

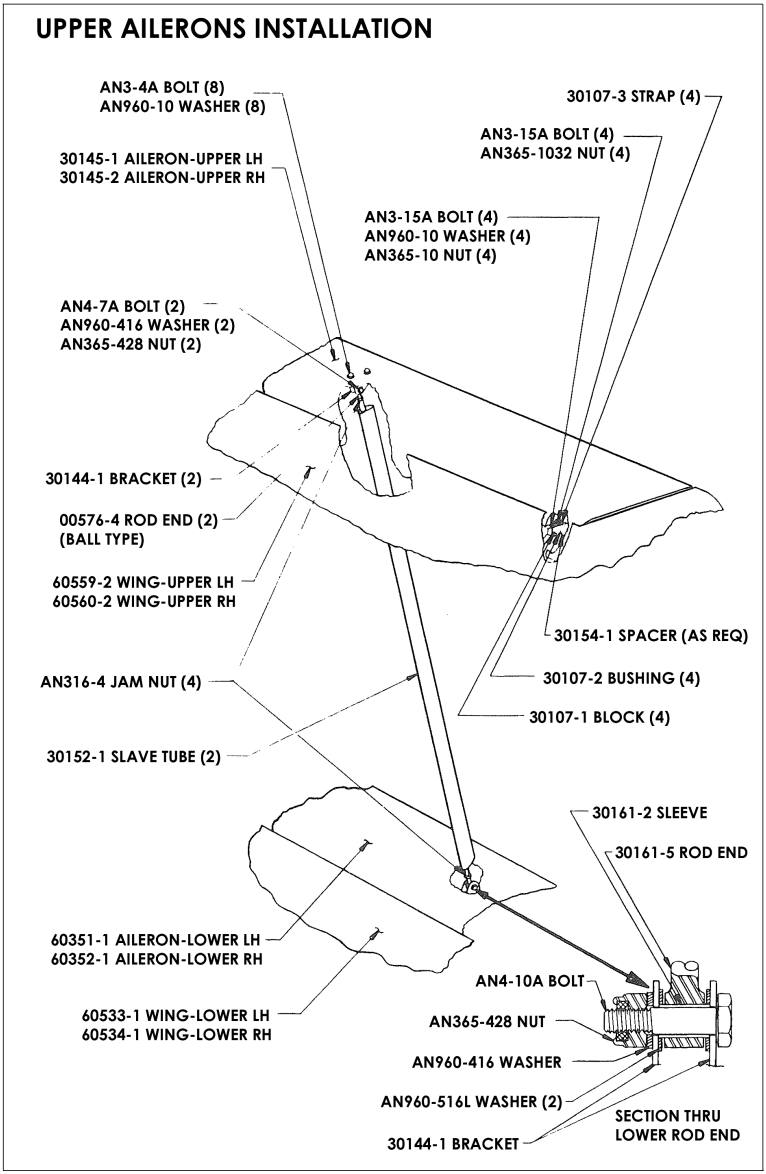

**EMPENNAGE RIGGING:**

(1) Fin

A. Clamp fin in place at upper and lower longerons aligning lower end of rear spar with bottom of fuselage. Drill and install (4) AN3-15 bolts, AN960-10L washers and AN365-1032 nuts.

B. Clamp and drill forward spar. Install (2) AN3-15A bolts and AN365-1032 nuts.

C. Fin leading edge attaches to inboard side of first stringer to right of top center stringer with (2) AN520-632-16 screws and AN365-632 nuts.

D. Check rudder hinges for vertical alignment.

(2) Stabilizer. (Installation of new stabilizers)

**NOTE:** A new 63255 center front beam and a new 63258 center rear beam must be installed with one or both new stabilizers.

A. Put stabilizers in place

B. Attach 30130-5 stabilizer lower brace wires and 30130-6 fin (upper) brace wires leaving some slack.

C. Recheck fuselage to be level laterally.

D. Level stabilizers laterally, maintaining a minimum of ¼" between fuselage fabric and stabilizer butt rib.

E. Align six hinge points with string or wire fore, aft and vertically. Fore and aft adjustment is accomplished by moving stabilizers on attach spars. It is especially important that the elevator horn hinges be perfectly located.

**NOTE:** All attach holes must be drilled from each side of beam. **DO NOT** drill thru.

**EMPENNAGE RIGGING**

F. Care must be exercised to assure the hinge alignment is maintained while attach holes are drilled. Locate (3) pilot holes, top and bottom on each rear stabilizer beam near fuselage. Drill 3/16" holes thru beam wall at each pilot location. Install (3) AN3-16A bolts, (3) AN960-10L washers and (3) AN365-1032 nuts in each stabilizer rear beam.
G. Drill ¼ " hole at each pilot hole location at front stabilizer spar. Attach at (2) places top and (2) places bottom on each side. Install (2) AN4-17A bolts, (4) AN960-416 washers and (2) AN365-428 nuts on each side.
H. Adjust brace wires to proper tension in this sequence; first, assure alignment of stabilizer hinges with lower wires, then adjust upper wires to proper tension while achieving straight alignment of fin hinge.
I. Stabilizer travel is ¼ ° up to 7 ¼ ° up.

(3) ELEVATOR: (Installation of new elevators)

**NOTE:** A new 63212 elevator horn assy. Must be installed with one or both new elevators.

A. Slide elevators in place.
B. Place a straight edge between fuselage and inboard stabilizer rib, resting on front and rear stabilizer beams.
C. Rotate elevator horn assy. Until straight edge is in contact with horn and both stabilizer beams. Maintain horn in this position and bring both elevators to trail behind stabilizers and align with each other. Drill 3/16 " hole thru elevator beam wall at each pilot hole locatin, (3) places top and (3) places bottom on each side. Install (3) AN3-16A bolts, (6) AN960-10L washers and (3) AN365-1032 nuts on each side.

**EMPENNAGE RIGGING:**

**NOTE**: The elevator position trailing the stabilizer described here is for elevator attachment only. It is **not** zero elevator position and is **not** used in determining elevator travel.

D. Re-adjust elevator cables lengths if required to position elevator travel in the proper range, elevator travel is determined by stops on aft control stick.
E. Elevator travel is 29° ± 1 down and 21° ± 1 up. Measured from level with top longeron.

(4) RUDDER:
A. Install rudder on hinge pins.
B. Install A73161 collar and AN380-4 .3 cotter key on lower pin.
C. Check freedom of movement and lube bearings with WD-40 (Silicone).
D. Connect rudder cables and adjust to 35° right and left travel.

## Section III GENERAL ASSEMBLY INSTRUCTIONS

### EMPENNAGE RIGGING ASSEMBLY